Ecological Engineering 102 (2017) 501–508

Contents lists available at ScienceDirect

Ecological Engineering

journal homepage: www.elsevier.com/locate/ecoleng

Filling up the gaps—Passive restoration does work on linear landscape elements

Orsolya Valkó[a], Balázs Deák[a,*], Péter Török[b], András Kelemen[b,c], Tamás Miglécz[a,c], Béla Tóthmérész[a]

[a] MTA-DE Biodiversity and Ecosystem Services Research Group, Egyetem tér 1., Debrecen H-4032, Hungary
[b] University of Debrecen, Department of Ecology, Egyetem tér 1., Debrecen H-4032, Hungary
[c] MTA's Post Doctoral Research Program, MTA TKI, Nádor utca 7, Budapest, 1051 Hungary

ARTICLE INFO

Article history:
Received 23 November 2016
Received in revised form 3 February 2017
Accepted 18 February 2017

Keywords:
Alkali grassland
Channel
Grassland restoration
Linear landscape element
Succession
Steppe

ABSTRACT

Open landscapes in many parts of Europe have been negatively affected by large-scale drainage and amelioration to support agricultural production. In continental alkali grasslands, amelioration and establishment of drainage ditch systems were typical in the 1950s and 60s. Drainage ditches caused a considerable fragmentation and degradation of natural grasslands; thus several projects aimed at eliminating these linear landscape elements. In a multi-site study, we explored the drivers of grassland recovery after soil-filling of drainage ditches in landscape-scale restoration projects in Hortobágy National Park, East-Hungary. Ditch embankments, formerly built from the excavated soil, were used to fill the 8-m wide ditches and grazing was applied to facilitate the recovery of grasslands similar to the surrounding matrix. Three age classes were selected for the study: 1-, 6- and 8-year-old filled ditches; with nine sites per age group, surrounded by three grassland types (27 ditches in total). We recorded the percentage cover of vascular plant species in 18 plots per ditch, 486 plots in total. We found that the species pool of the filled ditches became more similar to the reference grasslands with increasing successional age and increasing distance to the central zone of the ditches regardless of grassland type. Species richness of the filled ditches became more similar to that of the reference grasslands with increasing successional age. However, we found that several target species, especially salt-tolerant pioneers, could establish even in the first year. Grassland recovery was most successful in sites adjacent to dry grasslands characterised by soils with high salt content, which favoured specialist species and suppressed non-target species. Cover of non-target species was higher in wet meadows with moist, nutrient-rich soils which favoured generalists and non-target species. Our study revealed that passive restoration after soil filling of disused drainage ditches can effectively support grassland recovery even within less than ten years, when restoration sites are surrounded by natural grasslands.

1. Introduction

Parallel to the increasing level of infrastructural development, the area covered by linear landscape element networks is rapidly increasing worldwide. Roads, railways, electric wires, pipelines, dams, ditches and channels are the main elements of this network. For instance, the total length of the road network is longer than 64 million km in the World and we can expect its marked increase in the near future (van der Ree et al., 2015). A common feature of these linear landscape elements is that their construction and operation is usually associated with intense human disturbance, which results in a serious loss of natural habitats (Fahrig, 2003). In many cases these linear structures facilitate the dispersal of disturbance-tolerant or invasive species (Deák et al., 2016a). Moreover, they reduce habitat connectivity and often act as barriers for the movements of plant and animal populations (Hoenke et al., 2014; Wu et al., 2013). Fragmentation of formerly connected habitats affects landscape traits and ecological processes at multiple scales by altering habitat characteristics, community structure and population dynamics of species which generally leads to the decline of biodiversity (Deák et al., 2016b; Dolt et al., 2005; Ewers and Didham, 2006). These negative effects are well studied for roads (van der Ree et al., 2015), but much less attention has been paid to the effects of drainage ditch systems on biodiversity.

* Corresponding author.
E-mail address: debalazs@gmail.com (B. Deák).

http://dx.doi.org/10.1016/j.ecoleng.2017.02.024
0925-8574/

Strategic conservation planning is essential for mitigating the negative effects of linear landscape elements on natural ecosystems. It is crucial to assess the ecological consequences of the establishment of the existing items as well as to eliminate the disused ones (Bulot et al., 2014; Coiffait-Gombault et al., 2011; Hoenke et al., 2014). The elimination of disused linear landscape elements can be an effective and fast way of landscape-scale restoration if methods are fine-tuned and consider local circumstances. In areas where the ratio of natural habitats (i.e. propagule sources of target species) is high, we can expect a fast recovery of natural habitats after the elimination of linear landscape elements. By this approach, we can improve landscape-scale ecosystem functioning by enlarging existing natural habitats and re-establishing connections between them (Freund et al., 2014; Török et al., 2012; Zulka et al., 2014). The successful restoration of landscape connectivity includes three major steps (i) site preparation by removal of linear structures and landscape scars; (ii) supporting the establishment of target species, and (iii) post-restoration management to sustain and improve the diversity of recovered habitats (Freund et al., 2014; Kelemen et al., 2014).

The quality of the surrounding habitat matrix is a crucial factor of restoration success. When propagules of target species and dispersal vectors are provided in the surrounding matrix, establishment of target species is usually fast in the recovering habitats. In such cases, passive restoration can rely on locally available propagule sources (e.g. seed bank or seed rain; Prach and Řehounková, 2008; Török et al., 2011), offering a cost-effective and natural way of recovery. Thus, spontaneous recovery is expected to be faster in landscapes harbouring natural habitats, where propagule sources and dispersal vectors are present (Albert et al., 2014).

Several open landscapes in Europe have been affected by large-scale drainage and amelioration works in the past centuries to support agricultural production (Blann et al., 2009). For instance, 34% of farmland in Northwest Europe has been modified by drainage (Abbot and Leeds-Harrison, 1998). Worldwide, drainage systems are present on one third of the total land area, where the lack of the natural water supplies constrains agricultural production (Smedema and Ochs, 1997). In many cases drainage activities have not resulted in the desired increase in agricultural productivity, and thus drainage ditches can be removed. In such cases, soil filling of disused ditches can increase landscape aesthetic values and enhance landscape connectivity (Blomqvist et al., 2003). Grassland recovery on these linear landscape structures offers a unique opportunity to study the effects of the surrounding habitat matrix on grassland regeneration potential. Linear structures have a high perimeter/area ratio, which increases the establishment rate of target species via vegetative dispersal or seed rain from the surrounding matrix (Deák et al., 2015). Thus, grassland recovery is expected to be fast on narrow and linear soil surfaces surrounded by target grasslands.

We studied grassland recovery after soil-filling of drainage ditches in landscape-scale restoration projects in Hortobágy National Park, East-Hungary. The study area holds one of the largest open landscapes in Europe covering about 82,000 ha (Deák et al., 2015). The aims of the restoration projects were to restore former landscape connectivity by eliminating disused drainage ditches by soil-filling, to restore grasslands on the ditches, and to sustain the recovered grasslands by grazing. The overall aim of the restoration projects was to recover grasslands similar to their surrounding matrix, i.e. to grasslands adjacent to the filled ditches. Grassland recovery on soil-filled ditches is expected to be fast, since filled ditches are linear and narrow, their surrounding matrix consists of natural grasslands, and dispersal vectors, i.e. grazing livestock are present in the landscape (Deák et al., 2015; Tóth et al., 2016).

2. Aims of the study

Landscape-scale restoration projects provided a unique opportunity for a multi-site study of grassland recovery. We studied spontaneous grassland recovery on newly created open soil surfaces on soil-filled former drainage ditches. Since all the soil-filled ditches were adjacent to reference grasslands, we were able to define the reference state of grassland recovery and to compare vegetation characteristics of the recovering grasslands to those of reference grasslands. For this purpose, we adapted and tested the usefulness of the Relative Response Index (RRI; Armas et al., 2004; Perkins and Hatfield, 2014), which is generally used in ecological studies, but seems a proper tool also for restoration purposes. Our goal was to test the effect of the surrounding matrix (grassland type), spatial position and successional age on the success of grassland recovery on filled ditches. High similarity to reference grasslands in terms of species composition and cover of perennial graminoids, target forbs and non-target species were considered as restoration targets. We hypothesised that with increasing successional age and with increasing distance to the central zone of the ditch (i) the species pool of soil-filled ditches becomes more similar to reference grasslands, (ii) the cover of perennial grasses and target forbs becomes higher, and (iii) the cover of non-target species becomes lower.

3. Materials and methods

3.1. Study area

The study sites are in the Hortobágy Puszta (Hortobágy National Park) in Eastern-Hungary near settlements Balmazújváros, Tiszacsege, Hortobágy, Kunmadaras and Püspökladány (central coordinates: N 47°35′; E 21°09′). The lowland open landscape of the Hortobágy Puszta (elevation between 87 and 110 m a.s.l.) is characterised by alkali grasslands, marshes and loess steppes, forming one of the largest open landscapes in Europe (Török et al., 2014). The typical soil type of the region is meadow solonetz, characterized by moderate or high soluble soil content (Deák et al., 2014a). Alkali habitats are characterised by a dynamically changing water regime, they are wet in springtime and get dry for midsummer. The climate of the region is moderately continental characterised by a mean annual precipitation of 550 mm and a mean temperature of 9.5 °C with high strong variability among years (Lukács et al., 2015).

3.2. Site preparation and restoration

In the 1950s and 60 s several efforts were made to support agricultural intensification in Central-European alkali landscapes, especially in the Hortobágy Puszta. As a part of this attempt an extensive system of drainage and watering ditches was established in the region (Deák et al., 2015). These linear structures had considerable negative effects on the habitats at the landscape scale. They altered the natural water balance regimes by hampering surface water movement and lowering of the groundwater table. The latter caused severe leeching of alkali soils and resulted in a degradation of the alkali grasslands. The dense network of ditches caused serious problems in grassland management: the approximately 8-m wide ditches acted as obstacles during grazing and mowing. During the last decades, these problems motivated several landscape-scale restoration projects, aiming at elimination of disused linear structures.

We selected altogether 27 former ditches which were restored by soil-filling in 2004, 2006 and 2011 (9 ditches per each year respectively). Ditch embankments, formerly built from the excavated soil, were used to fill the ditches. Due to the applied

technology, the soil used for filling was completely mixed during the elimination works. The works were carried out by wheel loaders. The width of the ditches was approximately 8 m in every case. After site preparation by soil-filling and levelling of the soil surface, no other active restoration measures were applied (i.e. no seed sowing, plant material transfer, fertilisation or watering). The filled ditches were managed by moderate cattle grazing.

3.3. Reference grasslands

Adjacent to the studied filled ditches, there were three types of alkali grasslands representing alternative reference states of grassland recovery: (i) Achilleo setaceae-Festucetum pseudovinae dry alkali grasslands; (ii) Artemisio santonici-Festucetum pseudovinae dry alkali grasslands and (iiii) Agrostio stoloniferae-Alopecuretum pratensis alkali meadows; called hereafter as Achilleo-Festucetum, Artemisio-Festucetum and Agrostio-Alopecuretum. Dry alkali grasslands (Achilleo-Festucetum and Artemisio-Festucetum) are short steppic grasslands formed on meadow solonetz soils in the Hortobágy region (Deák et al., 2014a). Both grassland types are characterised by a high cover of the short grass species *Festuca pseudovina*. Achilleo-Festucetum grasslands are generally more species-rich and harbour several generalist grassland species, such as *Achillea collina*, *Plantago lanceolata* and *Trifolium* spp. (Török et al., 2016). Artemisio-Festucetum grasslands are species-poor dry grasslands, harbouring several salt-tolerant forbs, such as *Artemisia santonicum, Aster tripolium* ssp . *pannonicum, Limonium gmelinii* ssp. *hungarica* and *Podospermum canum* (Kelemen et al., 2015). Agrostio-Alopecuretum alkali meadows are species-poor mesophilous meadows characterised by tall grass species, such as *Alopecurus pratensis*, *Agrostis stolonifera* and *Elymus repens* and only a few forb species (Deák et al., 2014b). The reference grasslands, similarly to the filled ditches, were managed by moderate cattle grazing (Török et al., 2016).

3.4. Sampling design

In line with the timing of the ditch filling works, we selected three age classes for the study: 1-, 6- and 8-year-old filled ditches; with nine sites per age group (27 ditches in total). We used the chronosequence method to study spontaneous grassland recovery, as suggested by Walker et al. (2010). Within age groups, (i) three ditches were surrounded by Achilleo-Festucetum grasslands, (ii) three by Artemisio-Festucetum dry grasslands, and (iii) three by Agrostio-Alopecuretum meadows. We designated six cross-sections perpendicular to the filled ditches, which included three zones: (i) adjacent reference grassland; (ii) edge of the former ditch and (iii) the central zone of the former ditch, mentioned as 'reference grassland', 'edge zone' and 'central zone', hereafter. In each cross-section we designated three 1 m × 1 m plots (i.e. one plot per zone, see Fig. 1 for sampling design). Altogether we surveyed 18 plots per ditch, 486 plots in total. The percentage cover of vascular plants was recorded in each plot in June 2012. Nomenclature follows Király (2009).

Six intact soil samples (d = 4 cm, h = 10 cm) were taken with a vacuum soil corer from the three zones of every studied ditch; samples from the same zone of a ditch were pooled, resulting in 81 pooled samples in total. Soil samples were analysed in an accredited pedological laboratory (NAT-1-1654/2011), where the following soil parameters were determined: soluble salt (%), soil organic matter (%), calcium-carbonate ($CaCO_3$; mg kg^{-1})-, nitrogen- ($NO_2^- + NO_3^-$; mg kg^{-1}), potassium- (K_2O; mg kg^{-1}) and phosphorous (P_2O_5; mg kg^{-1}).

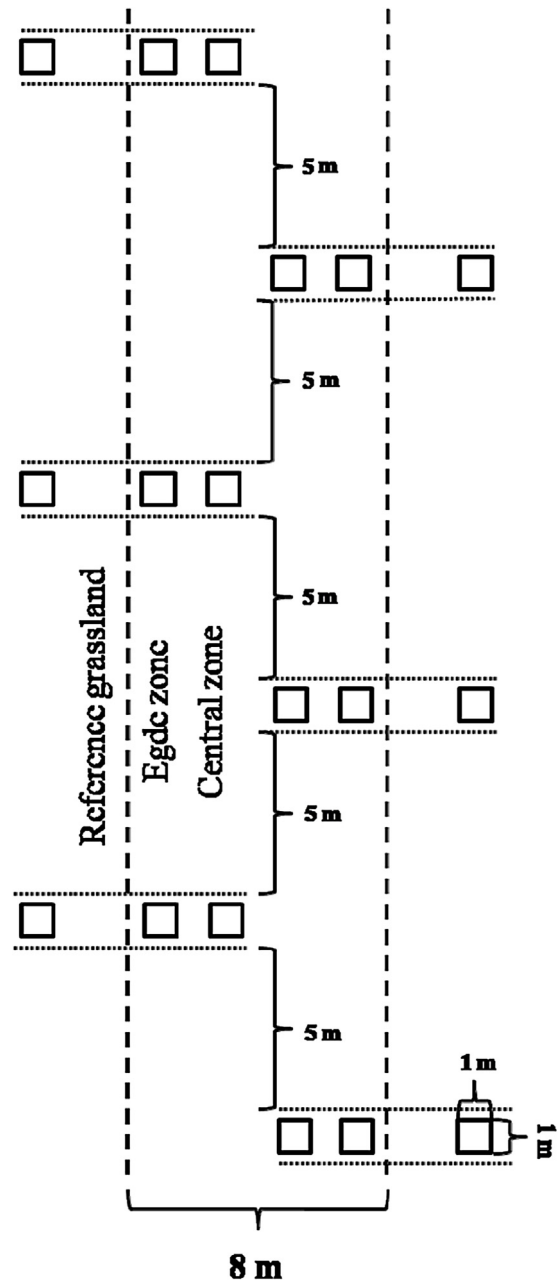

Fig. 1. Sampling design on a soil-filled ditch (N = 27 soil-filled ditches and 486 plots in total).

3.5. Data processing

We identified non-target species, based on Grime's ruderal species group (Grime, 1979), adapted to Central-European conditions in the Social Behaviour Types general classification of Borhidi (1995). Non-target species are mainly ruderal species or remnants of earlier successional stages, which typically do not occur in target grasslands. The species groups of adventive competitors (AC), ruderal competitors (RC) and weeds (W) were considered as non-target species. We classified all species into functional groups based on simplified life-form categories (short-lived: therophytes and hemitherophytes; and perennial: hemicryptophytes, geophytes and chamaephytes) and morphological features (forbs, i.e. dicots; and graminoids, i.e. Juncaceae, Cyperaceae and Poaceae). Target forb species were classified based on their phytosociological

affiliations: forb species typical to the Festuco-Brometea class were considered as target forbs (Borhidi et al., 2012).

To assess the species composition of the filled ditches and reference grasslands, a DCA ordination was calculated using CANOCO 4.5 program (ter Braak and Šmilauer, 2002). Soil parameters (total soluble salt content, soil organic matter, calcium-carbonate, nitrogen-, potassium- and phosphorous content) were included as an overlay. Percentage cover of the species was used for the calculations. Identical plots from the same zone of the ditches (six plots in the grassland, edge and central zone per ditch) were pooled for the DCA. To describe the similarity of the vegetation of filled ditches (the edge and central zone respectively) and reference grasslands, Sørensen similarity index was also calculated. Effects of age and grassland type on Sørensen similarity indices were analysed with linear mixed models (LMMs) where 'successional age', 'grassland type' and 'zone' were included as fixed factors and 'site' was included as random factor.

Relative Response Indices (RRI; Brinkman et al., 2010; Perkins and Hatfield, 2014) were calculated for describing the relationships between the vegetation characteristics (species richness and the covers of functional groups) of the soil-filled ditches (edge and central zones) and the reference grasslands. This index has been mainly used for studying interspecific interactions and plant-soil feedbacks (Armas et al., 2004; Perkins and Hatfield, 2014), however it has not been used for evaluating restoration success yet. We used the following equation:

$$RRI = (C_C - C_G)/(C_C + C_G)$$

where C_C represents the vegetation characteristic (i.e. species richness or the cover of a particular functional group) of the recovering grassland (the edge or central zone of a soil-filled ditch) and C_G represents the vegetation characteristic of the reference grassland. Value of RRI ranges from −1 to +1. The closer is the RRI to zero, the higher the similarity of the recovering vegetation to the reference grasslands, while the closer is |RRI| to 1, the lower the similarity. |RRI| scores of vegetation characteristics calculated for edge and the central zone of the ditches were compared by *t*-tests. To analyse restoration success, |RRI| scores of the vegetation characteristics were tested by linear mixed models (Zuur et al., 2009). Effects of age, grassland type and zone were analysed with LMMs where 'successional age', 'grassland type' and 'zone' were included as fixed factors and 'site' was included as random factor. All univariate statistics were calculated using SPSS 17.0 program. Vegetation characteristics of the three zones of the ditches were compared with one-way ANOVA and Tukey tests.

4. Results

4.1. Species composition of the restored and reference grasslands

We recorded altogether 124 vascular plant species in the study. We recorded 105, 54 and 50 species in the 1-, 6- and 8-year-old filled ditches, respectively. The reference grasslands harboured 79 species in total. According to the DCA ordination, the vegetation of 1-year-old filled ditches had a heterogeneous species composition regardless of grassland type (Fig. 2). The vegetation of 1-year-old filled ditches were characterised by non-target species (such as *Cirsium arvense* and *Carduus acanthoides*) and pioneer species of alkali grasslands (*Atriplex hastata*, *A. litoralis*, *Polygonum bellardii* and *Kochia prostrata*), which were plotted towards the high scores of nitrogen-, total soluble salt- and calcium-carbonate content. The species composition of 6- and 8-year-old filled ditches was more homogeneous compared to the 1-year-old ones, and the majority of species characteristic to reference grasslands were plotted towards these sites. 6-year-old filled ditches surrounded

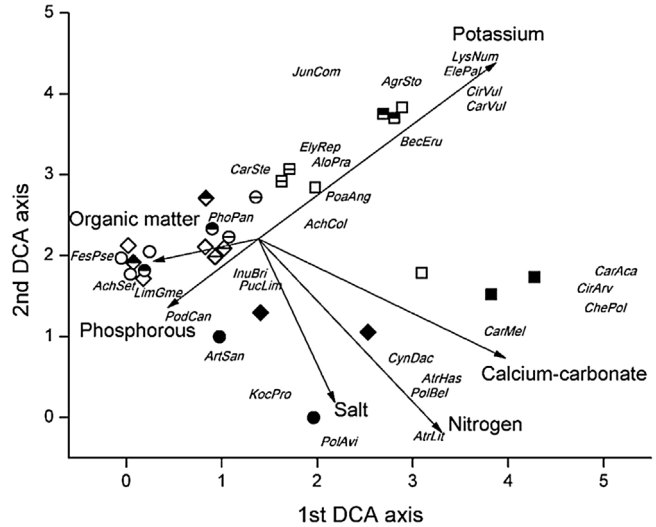

Fig. 2. Species composition of the 1-, 6- and 8-year-old soil-filled ditches plotted by a DCA. Main matrix consisted of specific cover scores, secondary matrix consisted of soil parameters. Notations: 1-year-old filled ditches surrounded by ●—Achilleo-Festucetum grasslands, ♦—Artemisio-Festucetum reference grasslands and ■—Agrostio-Alopecuretum grasslands; 6-year-old filled ditches surrounded by ◓—Achilleo-Festucetum grasslands, ◆ —Artemisio-Festucetum grasslands and ⬒ —Agrostio-Alopecuretum grasslands; 8-year-old filled ditches surrounded by ⊖—Achilleo-Festucetum grasslands, – Artemisio-Festucetum grasslands and ⊟—Agrostio-Alopecuretum grasslands; and reference grasslands: ○—Achilleo-Festucetum grasslands, ◊—Artemisio-Festucetum grasslands and □—Agrostio-Alopecuretum grasslands. Species were abbreviated using the first three letters of their genus and species names.

by Agrostio-Alopecuretum grasslands showed a distinct species composition, characterised by a high cover of moisture-demanding species, such as *Beckmannia eruciformis*, *Carex vulpina* and *Lysimachia nummularia*. The majority of the species characteristic for reference grasslands was plotted towards the high levels of soil organic matter content (Fig. 2).

Species pool of the filled ditches became more similar to the reference grasslands with increasing successional age regardless of grassland type (Sørensen similarity, Table 1, LMM, $p < 0.001$). The position within the ditch had a significant effect on the Sørensen similarity index calculated between the vegetation of soil filled ditches and reference grasslands (Table 1, LMM, $p < 0.05$). Sørensen similarity was higher between the edge zone and the reference grasslands than between the central zone and the reference grasslands especially in the 1-year-old filled ditches (Fig. A1). We detected high species richness in 1-year-old filled ditches, which decreased with successional age (Tables 1, A1). Species richness of the filled ditches became more similar to that of reference grasslands with increasing successional age (Table 1, LMM, $p < 0.001$, Table A1 and Fig. A1).

4.2. Relative response indices of species groups

In case of all vegetation characteristics, scores in restored sites became more similar to reference grasslands (i.e. RRIs were closer to zero) with increasing successional age (Fig. 3). 1-year-old filled ditches were characterised by significantly lower total vegetation cover, than the reference grasslands (Fig. A1). The only exception was found in case of Agrostio-Alopecuretum meadows, where total vegetation cover was similarly high as reference grasslands even in the 1-year-old filled ditches.

Total vegetation cover and the cover of the perennial graminoids increased with successional age in the filled ditches (Table A1) and the cover scores became more similar to the reference grasslands in the later stages of succession (LMM, $p < 0.001$, Table 1, Fig. 3).

Table 1
Effects of age, neighbouring grassland type, zone (position within the ditch) and site on Relative Response Index |RRI| scores of the vegetation characteristics (i.e. scores of the filled ditches compared to that of the surrounding grasslands) displayed by linear mixed models (LLM). In the LLM 'successional age', 'grassland type' and 'zone' were included as fixed factors, site was included as random factor. Significant effects are marked with boldface. Notations: ***: $p < 0.001$; **: $p < 0.01$; *: $p < 0.05$; n.s.: non significant.

	Successional age		Grassland type		Zone		Site	
	F	*p*	F	*p*	F	*p*	F	*p*
Sørensen similarity index	**38.03**	***	0.18	n.s.	**6.58**	*	1.18	n.s.
RRI of total vegetation cover	**12.45**	***	2.96	n.s.	0.04	n.s.	1.57	n.s.
RRI of perennial graminoid cover	**228.19**	***	**8.79**	***	1.07	n.s.	0.17	n.s.
RRI of target forb cover	**6.64**	**	1.63	n.s.	0.31	n.s.	1.13	n.s.
RRI of non-target species cover	**13.80**	***	**3.49**	*	0.01	n.s.	1.55	n.s.
RRI of total species richness	**17.45**	***	0.29	n.s.	0.04	n.s.	**2.31**	*
RRI of perennial graminoid species richness	**4.06**	*	**4.47**	*	2.34	n.s.	0.45	n.s.
RRI of target forb species richness	1.54	n.s.	**7.35**	**	0.80	n.s.	**2.29**	*
RRI of non-target species richness	**21.19**	***	1.41	n.s.	2.74	n.s.	0.06	n.s.

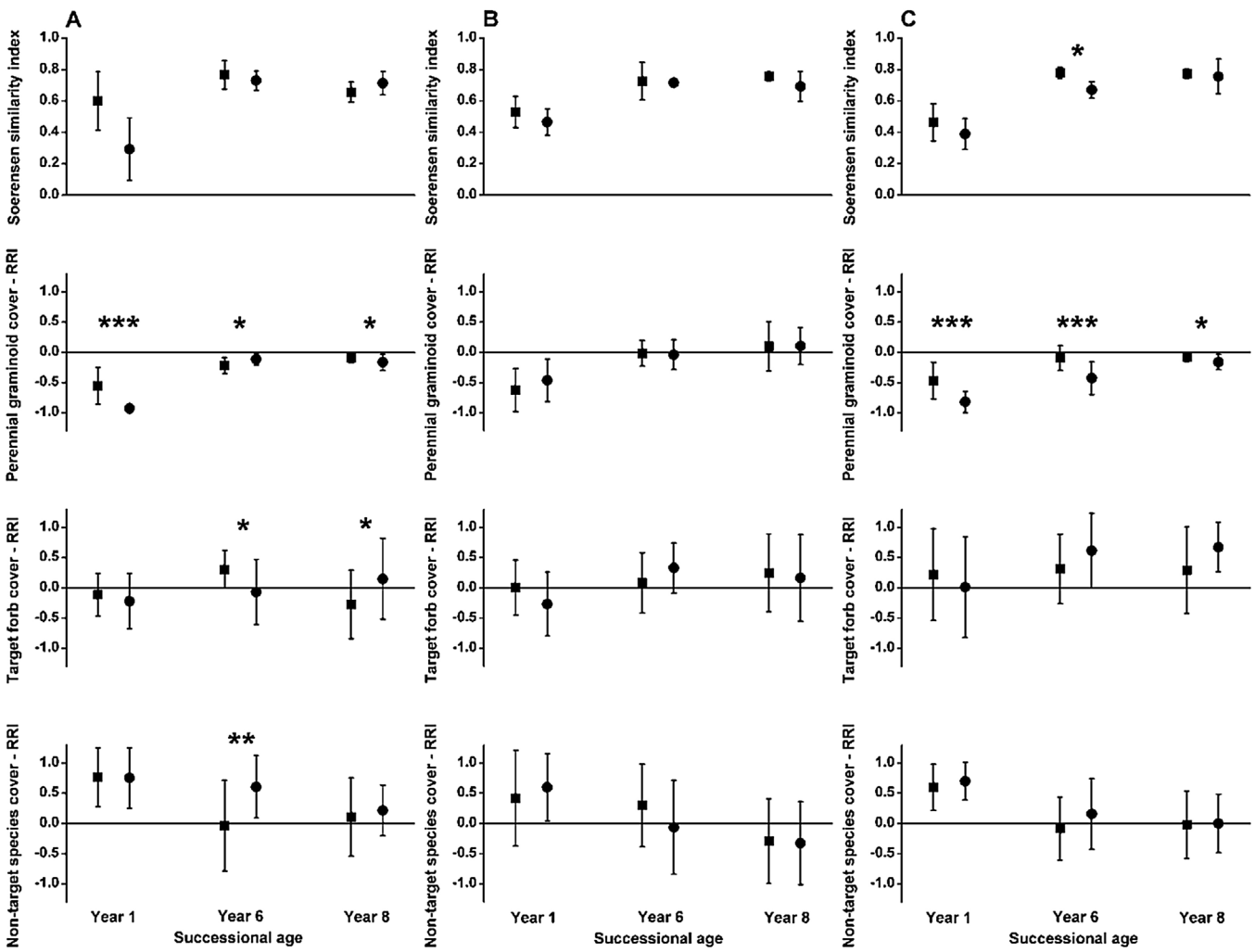

Fig. 3. Sørensen similarity and Relative Response Indices (RRIs) of perennial grass cover, target forb cover and non-target species cover. RRIs were calculated between cover scores in 1-, 6- and 8-year-old filled ditches and the Achilleo-Festucetum (A), Artemisio-Festucetum (B) and Agrostio-Alopecuretum (C) target grasslands. Rectangles denote scores calculated for the edge zone, while circles denote the central zone of the filled ditches. Asterisks denote significant differences between zones (t-tests, *** – $p < 0.001$; ** – $p < 0.01$; * – $p < 0.05$).

Grassland type had a significant effect on the RRIs of perennial graminoid cover ($p < 0.001$, Table 1) and species number ($p < 0.05$, Table 1). The cover of perennial graminoids was not different from the reference grasslands in case of 6- and 8-year-old filled ditches surrounded by Artemisio-Festucetum grasslands (Table A1, Fig. 3). The highest number of perennial graminoids was found in 6- and 8-year-old filled ditches surrounded by Agrostio-Alopecuretum meadows (Table A1, Fig. A2).

Target forb cover was affected by successional age ($p < 0.01$, Table 1). The cover of target forbs was even higher in the 6- and 8-year-old filled ditches compared to the reference grasslands regardless of grassland type (Table A1, Fig. 3). RRIs of species rich-

ness of target forbs were not different in the differently aged filled ditches (Table 1, Fig. A2). Grassland type ($p < 0.01$) and site ($p < 0.05$) had a significant effect on the RRI of target forb species richness (Table 1). Higher number of target forb species was found in 6- and 8-year-old filled ditches compared to the surrounding Agrostio-Alopecuretum meadows (Table A1).

Cover of non-target species was the highest in the central zone of the 1- and 6-year-old filled ditches, except for 6-year-old ditches surrounded by Artemisio-Festucetum grasslands (Table A1). Cover of non-target species decreased with successional age and became similar to that of reference grasslands regardless of grassland type and position within the ditch (Tables A1, 1, Fig. 3, LMM, $p < 0.001$). The species richness of non-target species was significantly affected by successional age (Fig. A2, Table 1, $p < 0.001$), they had the highest cover scores in 1-year-old filled ditches.

5. Discussion

5.1. Grassland recovery on soil-filled drainage ditches

Our study revealed that passive restoration (i.e. facilitating spontaneous grassland recovery) after soil-filling of disused drainage ditches can be a successful tool even within a few years, when restoration sites are surrounded by natural grasslands. This is in line with the theory proposed by Walker et al. (2014): on slightly damaged sites where there is a high chance for the spontaneous establishment of target species, it is not necessary to apply active restoration measures. The success of spontaneous grassland recovery was often studied on post-mining sites (Řehounková and Prach, 2010; Tischew et al., 2014) or abandoned croplands (Csecserits et al., 2011; Török et al., 2011; Valkó et al., 2016), but the effectiveness of this method has been rarely studied in case of linear landscape elements. By spontaneous grassland recovery we can save costs of species introduction (e.g. by seed sowing or plant material transfer; Török et al., 2012), and we can support the most natural regeneration pathways. As target species are able to establish from the surroundings, we can be sure that the local ecotypes will colonise the sites (Mijnsbrugge et al., 2010).

5.2. Species composition and indicators of restoration success

The DCA ordination revealed that first-year vegetation was characterised by weedy assemblages and high species number, however, besides non-target species, several target forb species were also present (Fig. 2). In the first year, the vegetation of the edge zone was much more similar to the reference grasslands than that of the central zone; but this zonation vanished for the sixth year, indicating the effective colonisation of perennial graminoids and target forbs and the disappearance of the majority of non-target species. The gradual establishment of target species from the surrounding grasslands suggests, that in the early years, species established mainly from seed banks in the central zone of the ditches, but later on establishment from the surrounding reference grasslands via clonal spreading and seed rain became important. Species richness was higher on the filled ditches compared to the reference grasslands regardless of grassland type or successional stage. These results also indicate that solely the species richness is a poor indicator of the restoration success, as high species richness scores in the early years after restoration are often due to the high number of non-target species (Klaus et al., 2016; Török et al., 2010). However, we found that species number of target forbs was similar on the filled channels regardless of successional age. They were present even from the early successional stages with high species number, even though their cover scores were low. During succession their cover increased significantly. This suggests that target species can establish in an early stage of the succession from local seed sources, and that even recently filled ditches contribute to the plant diversity at the landscape scale.

Low cover and species number of perennial grasses was typically found in the 1-year-old filled ditches, which increased significantly with successional age, especially in the two drier grassland types. In alkali meadows the cover of perennial grasses recovered more slowly than in the dry grasslands, likely because non-target species were more persistent there (Appendix 1). Generally, weeds find proper conditions in wet habitats. For example Sutherland (2004) analysed the flora of the United States and found weeds to be more characteristic to wetland habitats than other non-weedy species.

Another possible reason is that in the other two dry grassland types *Festuca pseudovina* tolerates grazing, trampling and can more successfully overcome the dominance of non-target species than typical grass species of alkali meadows. Interestingly, target forbs could successfully establish even in the first year, especially in the two grassland types characterised by salt stress, i.e. Achilleo-Festucetum and Artemisio-Festucetum (Lukács et al., 2015; Valkó et al., 2014). The likely reason is, that several forbs characteristic to these grassland types are pioneer species (e.g. *Atriplex hastata*, *A. litoralis*, *Kochia prostrata* and *Polygonum bellardii*), which can tolerate high salt content and found of open soil surfaces (Deák et al., 2015). We found that in 6- and 8-year-old filled ditches, the cover of target forbs was even higher than in the reference grasslands. This was probably caused by the fact that most of them could establish even in the early stages of succession and could persist on the site successfully (see also Albert et al., 2014). Availability of establishment microsites was probably higher for these species in the more open vegetation of the 1-year-old filled ditches compared to the closed sward with a dense litter layer typical in the reference grasslands (Kelemen et al., 2013). These results indicate that the management of the restoration sites by extensive grazing is a feasible tool for introducing the propagules of target species (Freund et al., 2015; Tölgyesi et al., 2015).

Non-target species, including short-lived weeds generally have dense and persistent seed banks in the soils of disturbed sites (Bekker et al., 1998; Davies et al., 2005); thus, they can quickly colonise newly created soil surfaces from local seed banks. In our study, the cover and species number of non-target species was highest in the 1-year-old filled ditches, but their cover values were considerably lower compared to other types of restored grasslands in the study region. Here, initial cover of non-target species ranged between 10 and 58% in the 1-year-old filled ditches, compared to 64–80% detected in the first year after active restoration by seed sowing on former croplands (Valkó et al., 2016). These differences can be originated from several reasons. First, residual weed seed banks are generally dense in croplands and several years time is needed for their depletion (Török et al., 2012). Second, propagule pressure of non-target species was likely lower in our case compared to intensively used agricultural landscapes. Third, several target species could establish even in the 1-year-old filled ditches, which could contribute to the suppression of non-target species. Finally, the moderate or high soil salt content could also hamper the germination and establishment of several non-target species (Deák et al., 2015). The latter was also indicated by the low cover of non-target species in Achilleo-Festucetum and Artemisio-Festucetum dry grasslands, probably because this grassland type was characterised by the highest salinity and lowest levels of soil organic matter (Valkó et al., 2014, and see also Fig. 2), which did not provide optimal establishment conditions for non-target species. The detected low cover of non-target species is beneficial from the viewpoint of the sustainable management, since it is associated with higher fodder quality which supports local animal husbandry (Valkó et al., 2016).

6. Conclusions

We found that passive restoration after soil-filling of disused drainage ditches is a successful restoration tool even within less than ten years. Regardless of grassland type, target grasslands recovered within 6–8 years. Relative Response Indices calculated for the cover of perennial graminoids, target forbs and non-target species indicated an increasing similarity to target grasslands with increasing successional age. Based on our results, we suggest using Relative Response Index in evaluating the success of restoration actions. Using this index, we can compare multiple characteristics of recovering vegetation to a realistic and desirable reference state; thus, we can evaluate directly the success of grassland recovery. This method is especially useful in cases when the restored sites are adjacent to reference grasslands. We propose four general indicators of restoration success – similarity of vegetation composition of restored and reference sites: cover of perennial grasses, cover of target forbs and the cover of non-target species. With these indicators by using the Relative Response Index, success of both active and passive restoration projects can be compared, even in different ecosystems. Such analyses can contribute to reveal general patterns of ecosystem restoration and can be effectively included in meta-analyses.

Acknowledgements

We are thankful to S. Gőri, I. Kapocsi and L. Gál for their help in fieldwork. Authors were supported by OTKA PD 111807 (OV), OTKA PD (BD), OTKA K 116239 (BT), NKFIH K 119 225 (PT), and the Bolyai János Fellowship of the Hungarian Academy of Sciences (OV, BD). OV was supported by the Human Capacities Grant Management Office and the Hungarian Ministry of Human Capacities (NTP-NFTÖ-16-0107). AK and MT were supported by the MTAs Postdoctoral Fellowship Programme.

Appendix A. Supplementary data

Supplementary data associated with this article can be found, in the online version, at http://dx.doi.org/10.1016/j.ecoleng.2017.02.024.

References

Abbot, C.L., Leeds-Harrison, P.B., 1998. Research Priorities for Agricultural Drainage in Developing Countries. P 17 TDR Project R6879, Report OD/TN92. Department for International Development, HR, Wallingford, UK.
Albert, Á.-J., Kelemen, A., Valkó, O., Miglécz, T., Csecserits, A., Rédei, T., Deák, B., Tóthmérész, B., Török, P., 2014. Trait-based analysis of spontaneous grassland recovery in sandy old-fields. Appl. Veg. Sci. 17, 214–224.
Armas, C., Ordiales, R., Pugnaire, F.I., 2004. Measuring plant interactions: a new comparative index. Ecology 85, 2682–2686.
Bekker, R.M., Knevel, I.C., Tallowin, J.B.R., Troost, E.M.L., Bakker, J.P., 1998. Soil nutrient input effects on seed longevity: a burial experiment with meadow species. Funct. Ecol. 12, 673–682.
Blann, K.-L., Anderson, J.L., Sands, G.R., Vondracek, B., 2009. Effects of agricultural drainage on aquatic ecosystems: a review. Crit. Rev. Environ. Sci. Technol. 39, 909–1001.
Blomqvist, M.M., Vos, P., Klinkhamer, P.G.L., ter Keurs, W.J., 2003. Declining plant species richness of grassland ditch banks—a problem of colonisation or extinction? Biol. Conserv. 109, 391–406.
Borhidi, A., 1995. Social behaviour types, the naturalness and relative indicator values of the higher plants in the Hungarian Flora. Acta Bot. Hung. 39, 97–181.
Borhidi, A., Kevey, B., Lendvai, G., 2012. Plant Communities of Hungary. Akadémiai Kiadó, Budapest.
Brinkman, E.P., van der Putten, W.H., Bakker, E.-J., Verhoeven, K.J.F., 2010. Plant–soil feedback: experimental approaches, statistical analyses and ecological interpretations. J. Ecol. 98, 1063–1073.
Bulot, A., Provost, E., Dutoit, T., 2014. A comparison of different soil transfer strategies for restoring a Mediterranean steppe after a pipeline leak (La Crau plain, South-Eastern France). Ecol. Eng. 71, 690–702.
Coiffait-Gombault, C., Buisson, E., Dutoit, T., 2011. Hay transfer promotes establishment of mediterranean steppe vegetation on soil disturbed by pipeline construction. Restor. Ecol. 19, 214–222.
Csecserits, A., Czúcz, B., Halassy, M., Kröel-Dulay, G., Rédei, T., Szabó, R., Szitár, K., Török, K., 2011. Regeneration of sandy old-fields in the forest steppe region of Hungary. Plant Biosyst. 145, 715–729.
Davies, A.S., Cardina, J., Forcella, F., Johnson, G.A., Kegode, G., Lindquist, J.L., Luschei, E.C., Renner, K.A., Sprague, C.L., Williams, M.M., 2005. Environmental factors affecting seed persistence of annual weeds across the US corn belt. Weed Sci. 53, 860–868.
Deák, B., Valkó, O., Alexander, C., Mücke, W., Kania, A., Tamás, J., Heilmeier, H., 2014a. Fine-scale vertical position as an indicator of vegetation in alkali grasslands—case study based on remotely sensed data. Flora 209, 693–697.
Deák, B., Valkó, O., Török, P., Tóthmérész, B., 2014b. Solonetz meadow vegetation (*Beckmannion eruciformis*) in East-Hungary—an alliance driven by moisture and salinity. Tuexenia 34, 187–203.
Deák, B., Valkó, O., Török, P., Kelemen, A., Miglécz, T., Szabó Sz Szabó, G., Tóthmérész, B., 2015. Micro-topographic heterogeneity increases plant diversity in old stages of restored grasslands. Basic Appl. Ecol. 16, 291–299.
Deák, B., Valkó, O., Török, P., Tóthmérész, B., 2016a. Factors threatening grassland specialist plants—a multi-proxy study on the vegetation of isolated grasslands. Biol. Conserv. 204, 255–262, http://dx.doi.org/10.1016/j.biocon.2016.10.023.
Deák, B., Tóthmérész, B., Valkó, O., Sudnik-Wójcikowska, B., Bragina, T.-M., Moysiyenko, I., Apostolova, I., Bykov, N., Dembicz, I., Török, P., 2016b. Cultural monuments and nature conservation: the role of kurgans in maintaining steppe vegetation. Biodivers. Conserv. 25, 2473–2490.
Dolt, C., Goverde, M., Baur, B., 2005. Effects of experimental small-scale habitat fragmentation on above and below-ground plant biomass in calcareous grasslands. Acta Oecol. 27, 49–56.
Ewers, R.M., Didham, R.K., 2006. Confounding factors in the detection of species responses to habitat fragmentation. Biol. Rev. 81, 117–142.
Fahrig, L., 2003. Effects of habitat fragmentation on biodiversity. Ann. Rev. Ecol. Evol. Syst. 34, 487–515.
Freund, L., Eichberg, C., Retta, I., Schwabe, A., 2014. Seed addition via epizoochorous dispersal in restoration: an experimental approach mimicking the colonization of bare soil patches. Appl. Veg. Sci. 17, 74–85.
Freund, L., Carillo, J., Storm, C., Schwabe, A., 2015. Restoration of a newly created inland-dune complex as a model in practice: impact of substrate, minimized inoculation and grazing. Tuexenia 35, 221–248.
Grime, J.P., 1979. Plant Strategies and Vegetation Processes. John Wiley and Son, New York,US.
Hoenke, K.M., Kumar, M., Batt, L., 2014. A GIS based approach for prioritizing dams for potential removal. Ecol. Eng. 64, 27–36.
Kelemen, A., Török, P., Valkó, O., Miglécz, T., Tóthmérész, B., 2013. Mechanisms shaping plant biomass and species richness: plant strategies and litter effect in alkali and loess grasslands. J. Veg. Sci. 24, 1195–1203.
Kelemen, A., Török, P., Valkó, O., Deák, B., Miglécz, T., Tóth, K., Ölvedi, T., Tóthmérész, B., 2014. Sustaining recovered grasslands is not likely without proper management: vegetation changes and large-scale evidences after cessation of mowing. Biodivers. Conserv. 23, 741–751.
Kelemen, A., Török, P., Valkó, O., Deák, B., Tóth, K., Tóthmérész, B., 2015. Both facilitation and limiting similarity shape the species coexistence in dry alkali grasslands. Ecol. Complex. 21, 34–38.
Király, G., 2009. New Hungarian Herbal. The Vascular Plants of Hungary. Identification Keys. Aggtelek National Park Directorate, Jósvafő (in Hungarian).
Klaus, V.H., Schäfer, D., Kleinebecker, T., Fischer, M., Prati, D., Hölzel, N., 2016. Enriching plant diversity in grasslands by large-scale experimental sward disturbance and seed addition along gradients of land-use intensity. J. Plant Ecol., http://dx.doi.org/10.1093/jpe/rtw062.
Lukács, B.A., Török, P., Kelemen, A., Várbíró, G., Radócz, S., Miglécz, T., Tóthmérész, B., Valkó, O., 2015. Rainfall fluctuations and vegetation patterns in alkali grasslands—slf-organizing maps in vegetation analysis. Tuexenia 35, 381–397.
Mijnsbrugge, K.V., Bischoff, A., Smith, B., 2010. A question of origin: where and how to collect seed for ecological restoration. Basic Appl. Ecol. 11, 300–311.
Perkins, L.B., Hatfield, G., 2014. Competition, legacy, and priority and the success of three invasive species. Biol. Invasions 16, 2543–2550.
Prach, K., Řehounková, K., 2008. Spontaneous vegetation succession in gravel–sand pits: a potential for restoration. Restor. Ecol. 16, 305–312.
Řehounková, K., Prach, K., 2010. Life-history traits and habitat preferences of colonizing plant species in long-term spontaneous succession in abandoned gravel–sand pits. Basic Appl. Ecol. 11, 45–53.
Smedema, L.K., Ochs, W.J., 1997. The State of Land Drainage in the World. International Commission on Irrigation and Drainage, New Delhi, India.
Sutherland, S., 2004. What makes a weed a weed: life history traits of native and exotic plants in the USA. Oecologia 141, 24–39.
ter Braak, C.J.F., Šmilauer, P., 2002. CANOCO Reference Manual and CanoDraw for Windows User's Guide: Software for Canonical Community Ordination (version 4.5). Microcomputer Power, Ithaca, NY, US.
Tóth, E., Deák, B., Valkó, O., Kelemen, A., Miglécz, T., Tóthmeresz, B., Török, P., 2016. Livestock type is more crucial than grazing intensity: traditional cattle and sheep grazing in short-grass steppes. Land Degrad. Dev., http://dx.doi.org/10.1002/ldr.2514.
Tölgyesi, C., Bátori, Z., Erdős, L., Gallé, R., Körmöczi, L., 2015. Plant diversity patterns of a Hungarian steppe-wetland mosaic in relation to grazing regime and land use history. Tuexenia 35, 399–416.
Török, P., Deák, B., Vida, E., Valkó, O., Lengyel, S., Tóthmérész, B., 2010. Restoring grassland biodiversity: sowing low-diversity seed mixtures can lead to rapid favourable changes. Biol. Conserv. 143, 806–812.

Török, P., Kelemen, A., Valkó, O., Deák, B., Lukács, B., Tóthmérész, B., 2011. Lucerne dominated fields recover native grass diversity without intensive management actions. J. Appl. Ecol. 48, 257–264.
Török, P., Miglécz, T., Valkó, O., Kelemen, A., Deák, B., Lengyel, S., Tóthmérész, B., 2012. Recovery of native grass biodiversity by sowing on former croplands: is weed suppression a feasible goal for grassland restoration? J. Nat. Conserv. 20, 41–48.
Török, P., Valkó, O., Deák, B., Kelemen, A., Tóthmérész, B., 2014. Traditional cattle grazing in a mosaic alkali landscape: effects on grassland biodiversity along a moisture gradient. PLoS One 9 (5), e97095.
Török, P., Valkó, O., Deák, B., Kelemen, A., Tóth, E., Tóthmérész, B., 2016. Managing for composition or species diversity?—Pastoral and year-round grazing systems in alkali grasslands. Agric. Ecosys. Environ. 234, 23–30, http://dx.doi.org/10.1016/j.agee.2016.01.010.
Tischew, S., Baasch, A., Grunert, H., Kirmer, A., 2014. How to develop native plant communities in heavily altered ecosystems: examples from large-scale surface mining in Germany. Appl. Veg. Sci. 17, 288–301.
Valkó, O., Tóthmérész, B., Kelemen, A., Simon, E., Miglécz, T., Lukács, B., Török, P., 2014. Environmental factors driving vegetation and seed bank diversity in alkali grasslands. Agric. Ecosyst. Environ. 182, 80–87.
Valkó, O., Deák, B., Török, P., Kelemen, A., Miglécz, T., Tóth, K., Tóthmérész, B., 2016. Abandonment of croplands: problem or chance for grassland restoration? Case studies from Hungary. Ecosyst. Health Sustain. 2 (2), e01208.
van der Ree, R., Smith, D.J., Grilo, C., 2015. Handbook of Road Ecology. Wiley-Blackwell, Oxford.
Walker, L.R., Wardle, D.A., Bardgett, R.D., Clarckson, B.D., 2010. The use of chronosequences in studies of ecological succession and soil development. J. Ecol. 98, 725–736.
Walker, L.R., Hölzel, N., Marrs, R., del Moral, R., Prach, K., 2014. Optimization of intervention levels in ecological restoration. Appl. Veg. Sci. 17, 187–192.
Wu, J., Liu, Z., Qian, J., 2013. Non-linear effect of habitat fragmentation on plant diversity: evidence from a sand dune field in a desertified grassland in northeastern China. Ecol. Eng. 54, 90–96.
Zulka, K.-P., Abensperg-Traun, M., Milasowszky, N., Bieringer, G., Gereben-Krenn, B.-A., Holzinger, W., Hölzler, G., Rabitsch, W., Reischütz, A., Querner, P., Sauberer, N., Schmitzberger, I., Willner, W., Wrbka, T., Zechmeister, H., 2014. Species richness in dry grassland patches of eastern Austria: a multi-taxon study on the role of local, landscape and habitat quality variables. Agric. Ecosyst. Environ. 182, 25–36.
Zuur, A., Ieno, E.N., Walker, N., Saveiliev, A.A., Smith, G.M., 2009. Mixed Effects Models and Extensions in Ecology with R. Springer, New York, USA.